Transfer or duplication of this doucument as well as the utilisation or communication of its content are not permitted unless express consent is granted. Violations give rise to claims for damages. All rights reserved in case of patent, utility model or design patent registrations.

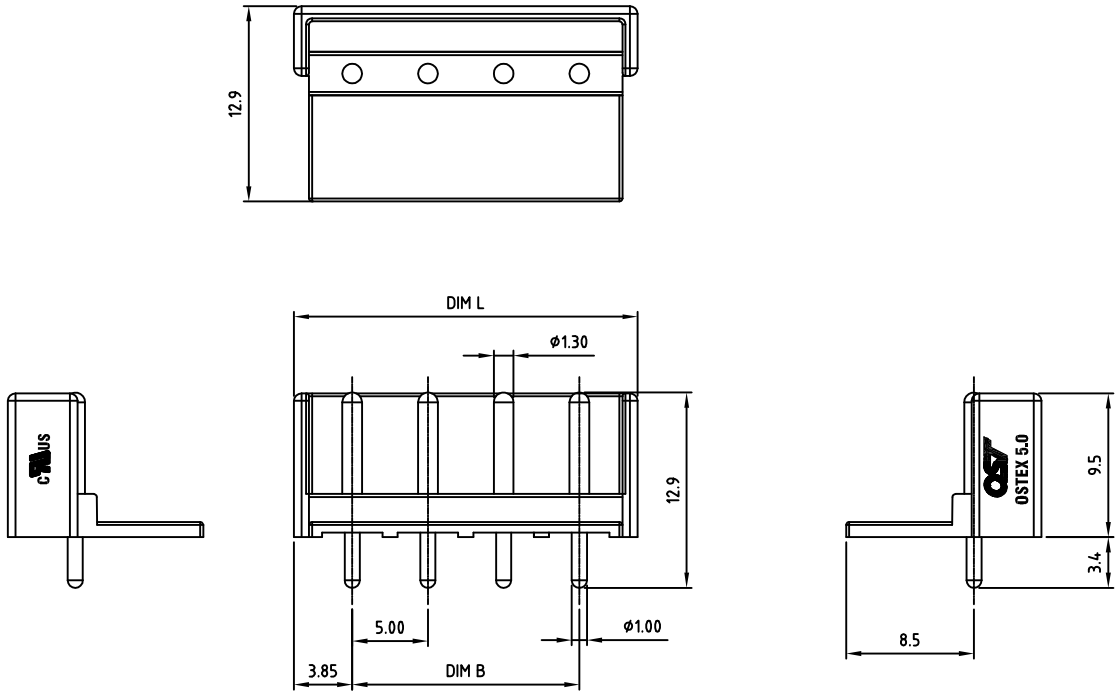

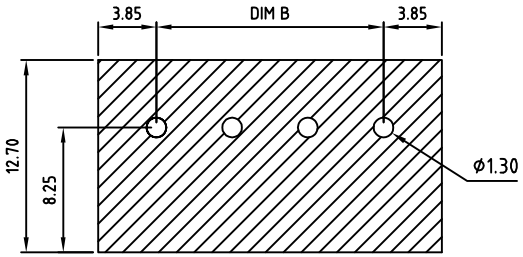

P.C.B. LAYOUT

Technical data

1.Nominal voltage: 300V/10A
PITCH:5.0mm

2Insulation Withstanding Voltage:
AC 1600V/MIN

3.Insulation Resistance:
1000MΩor more at DC500V

4.Operating temperature range:-40°C ~ 115°C
Soldering temperature:250°C±10°C /5s

5.Undimensioned Tolerances:

Dim.L=(P-1)x5.0+7.7
Dim.B=(P-1)x5.0
P= number of poles

	Dim B	Dim L
0-30mm	±0.15	±0.20
over 30mm-60mm	±0.20	±0.25
over 60mm-90mm	±0.25	±0.30
over 90mm	±0.30	±0.40

6.Safety approval:

7.RoHS Compliance

Part No.:

OSTEXXX0000

No. of Poles
02 2 Poles
03 3 Poles
... ...
24 24 Poles

COLOR
0: Black (Standard)
2: Red
3: Orange
4: Yellow
5: Green
6: Blue
8: Grey

Nonstandard colors
Mins could apply

ITEM	NAME OF PART	MATERIAL	NOTES	Q"TY
2	SOLIDER PIN	BRASS	TIN PLATED	P
1	BODY	PA66 UL94V-0	ALL	1

DWG.	WF. Zhang	DATE	2016.05.31	UNITS:	MM	SHEET:	1 OF 1
CHK.	WF. Zhang	DATE	2016.05.31	SCALE:	NONE 3:1 (:)	REV.: A	
APP.		DATE		TITLE:	OSTEX 5.0 Series 180D Pin header Ø 1.30mm		
				PART NO.	OSTEXXX0000		
				DWG NO.	OSTEXXX0000.dwg		

Tolerance	
X.	±0.50
X.X	±0.30
X.XX	±0.10
X°	±1°

SIGN	DESCRIPTION	CHK.	DATE
1			

ON-SHORE TECHNOLOGY, INC.