Jan. 2022 Ver.7.0
TDK Corporation

Multilayer Directional Coupler

For 3400-5950MHz

HHM Series 1.0x0.5mm [EIA 0402] TYPE

P/N: **HHM2952A1**

Jan. 2022 Ver.7.0
TDK Corporation

HHM2952A1

SHAPES AND DIMENSIONS

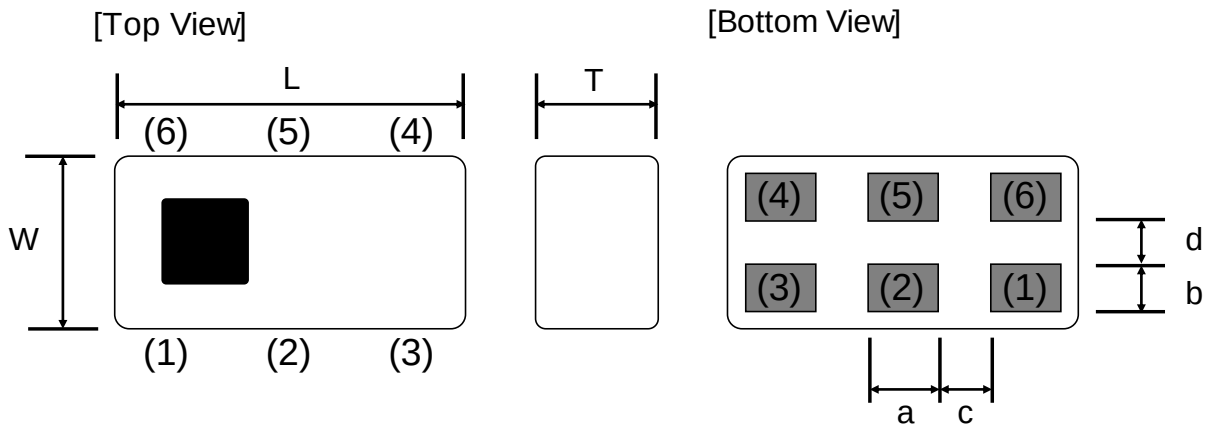

Dimensions (mm)

L	W	T	a	b	c	d
1.00 +/-0.05	0.50 +/-0.05	0.40 +/-0.05	0.18 +/-0.05	0.125 +/-0.05	0.20 +/-0.05	0.20 +/-0.05

Terminal functions

(1)	Coupling Port
(2)	GND
(3)	50ohm Termination

(4)	Output Port
(5)	GND
(6)	Input Port

TERMINATION FINISH

Material
Au plate

Jan. 2022 Ver.7.0
TDK Corporation

HHM2952A1

ELECTRICAL CHARACTERISTICS

(Measurement)

Parameter	Frequency (MHz)	TDK Spec		
		Min.	Typ.	Max.
CouplingdB)	3400 to 5950	24.0	25.5	27.0
Isolation(dB)	3400 to 5950	40	49.3	-
Insertion Loss(dB)	3400 to 5950	-	0.06	0.25
Insertion Loss(dB)	3400 to 5950	-	-	0.35
(-40 to +85 °C)				
Return Loss(dB)	3400 to 5950	10	30.2	-
Insertion Loss of Sub Line(dB)	3400 to 5950	-	0.42	1.00
Insertion Loss of Sub Line(dB)	3400 to 5950	-	-	1.10
(-40 to +85 °C)				
Return Loss of Sub Line(dB)	3400 to 5950	10	15.5	-
Characteristic Impedance (ohm)		50 (Nominal)		

Ta = +25+/-5°C

Coupler Type

Daisy Chain Available	Yes
Bi-Directional	No

MAXIMUM RATINGS

Parameter		TDK Spec	Conditions
Operating temperature (°C)		–40 to +85 °C	
Storage temperature (°C)		–40 to +85 °C	
Power Handling (W) *1	Frequency (MHz)		
	3400 to 5950	3	CW
Human Body Model : HBM	@Each Port (V)	+/-1000	100pF / 1500ohm
Machine Model : MM	@Each Port (V)	+/-150	200pF / 0ohm
Charged Device Model : CDM	@Each Port (V)	+/-500	Humidity : 60%RH max

*1 : Refer to 3GPP TS 38.101-1V15.2.0

Jan. 2022 Ver.7.0
TDK Corporation

HHM2952A1

■ FREQUENCY CHARACTERISTICS

Coupling

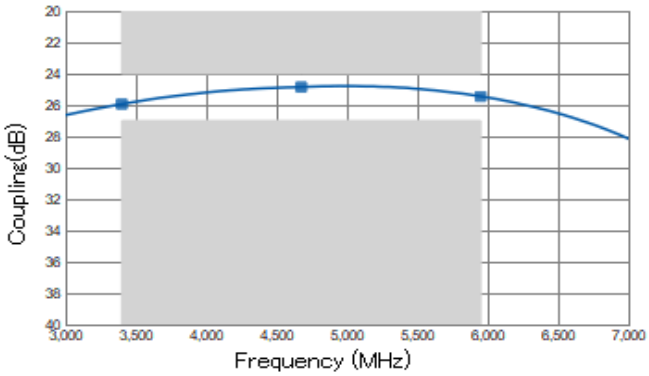

P/N Freq	D.U.T
3400	25.94
4675	24.85
5950	25.45

Isolation

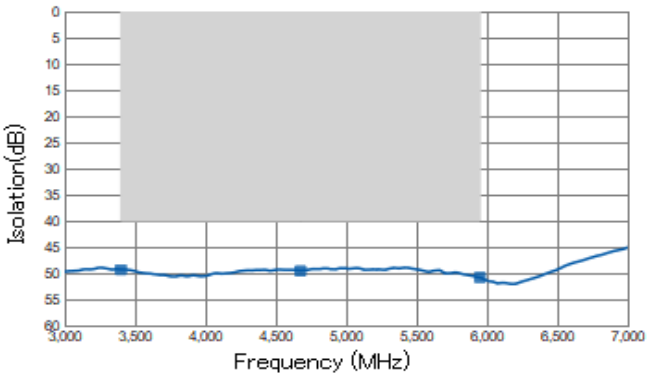

P/N Freq	D.U.T
3400	49.34
4675	49.58
5950	50.83

S21(main line Insertion Loss)

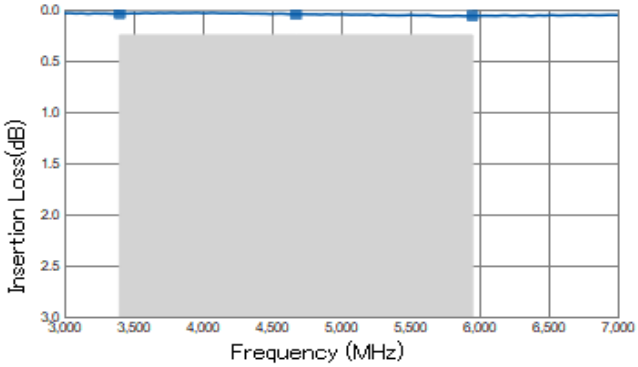

P/N Freq	D.U.T
3400	0.04
4675	0.05
5950	0.06

S11(Main Line Return Loss)

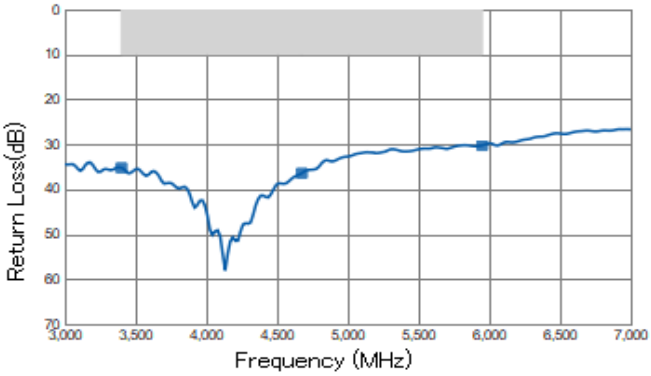

P/N Freq	D.U.T
3400	35.24
4675	36.44
5950	30.25

Jan. 2022 Ver.7.0
TDK Corporation

HHM2952A1

■ FREQUENCY CHARACTERISTICS

S43(sub Line Insertion Loss)

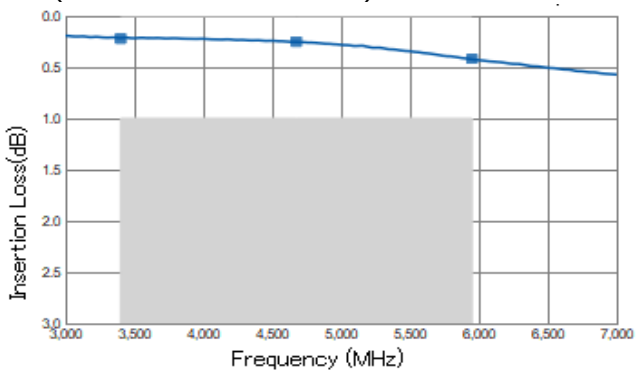

P/N Freq	D.U.T
3400	0.22
4675	0.25
5950	0.42

S33(sub line Return Loss)

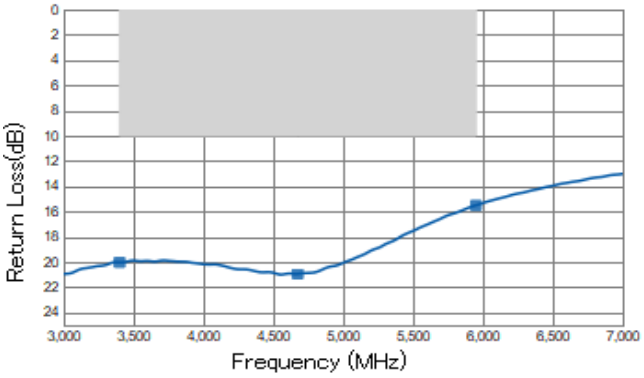

P/N Freq	D.U.T
3400	20.03
4675	20.94
5950	15.51

Jan. 2022 Ver.7.0
TDK Corporation

HHM2952A1

RECOMMENDED LAND PATTERN

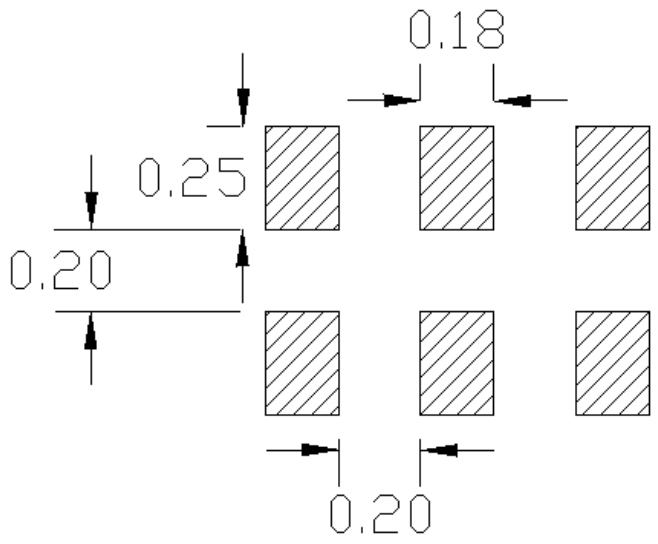

unit : mm

EVALUATION BOARD

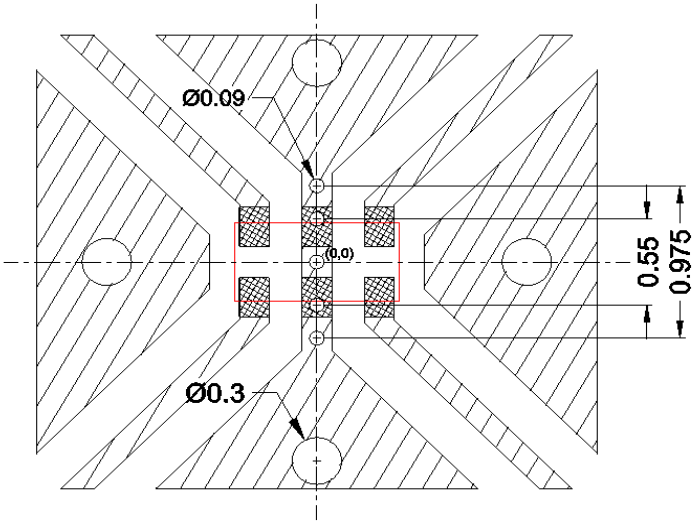

Thru Hole
Surface Pattern
Land Pattern
DUT

Material & Layer	Thickness
Copper Surface Pattern	0.035 mm
FR-4	0.10 mm
Inner GND	0.018 mm
FR-4	0.30 mm
Copper Bottom GND	0.035 mm

* Line width should be designed to match 50 ohm characteristic impedance depending on PCB material and thickness.

ENVIRONMENT INFORMATION

RoHS Statement
RoHS Compliance

Jan. 2022 Ver.7.0
TDK Corporation

HHM2952A1

■ RECOMMENDED REFLOW PROFILE

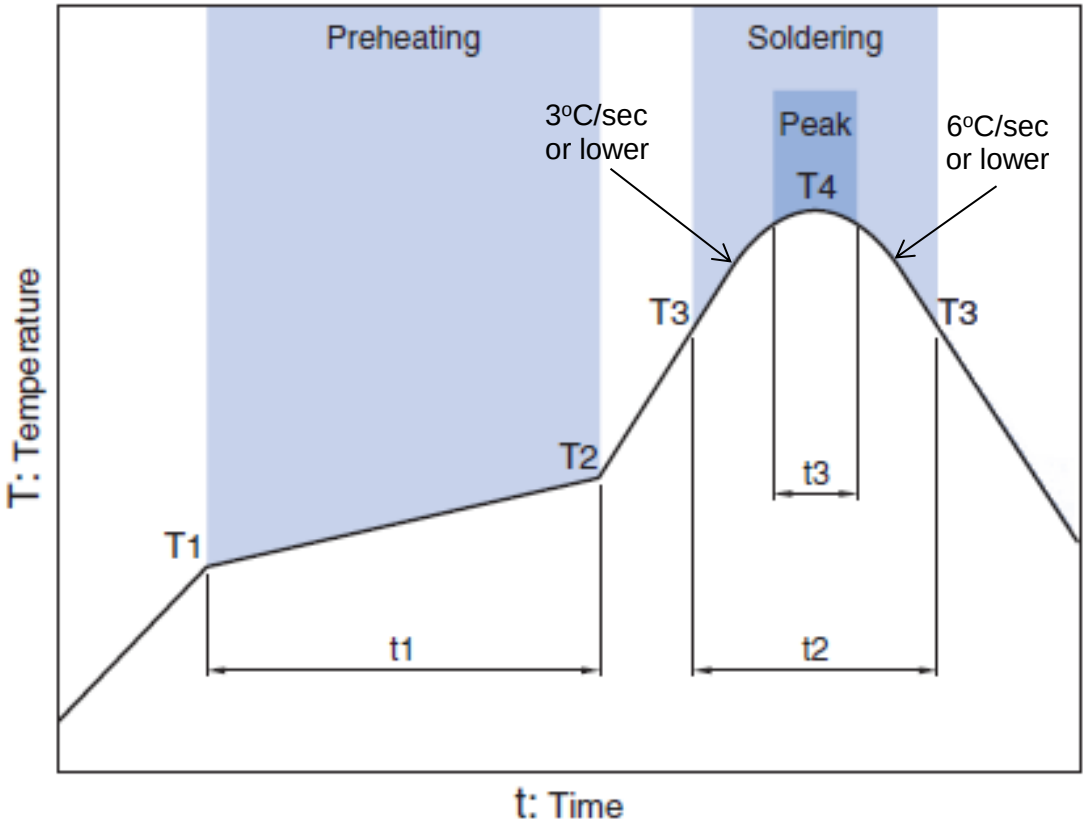

Preheating			Soldering			
			Critical zone (T3 to T4)		Peak	
Temp.		Time	Temp.	Time	Temp.	Time
T1	T2	t1	T3	t2	T4	t3 *
150°C	200°C	60 to 120sec	217°C	60 to 120sec	240 to 260°C	30 sec Max

* t3 : Time within 5°C of actual peak temperature
The maximum number of reflow is 3.

Note: Lead free solder is recommended.
Recommended solder is Sn-3.0Ag-0.5Cu. (M705 by Senju Metal Industry)

■ GENERAL TECHNICAL INFORMATION

https://product.tdk.com/en/system/files?file=dam/doc/product/rf/rf/coupler/general_tech_info/rf_general-technical-info_02_en.pdf

Jan. 2022 Ver.7.0
TDK Corporation

HHM2952A1

■ PACKAGING STYLE

Reel Dimensions

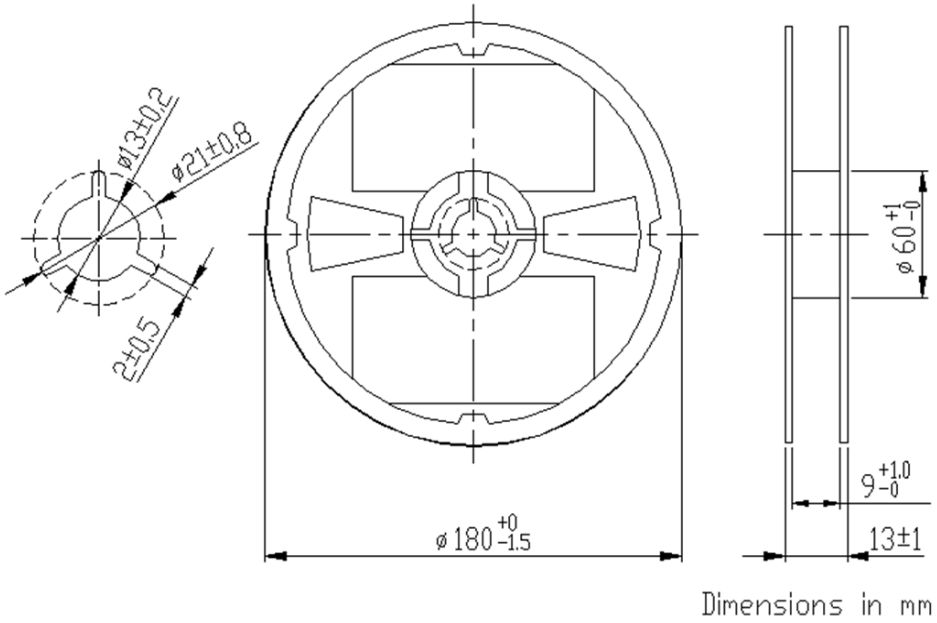

Carrier Tape

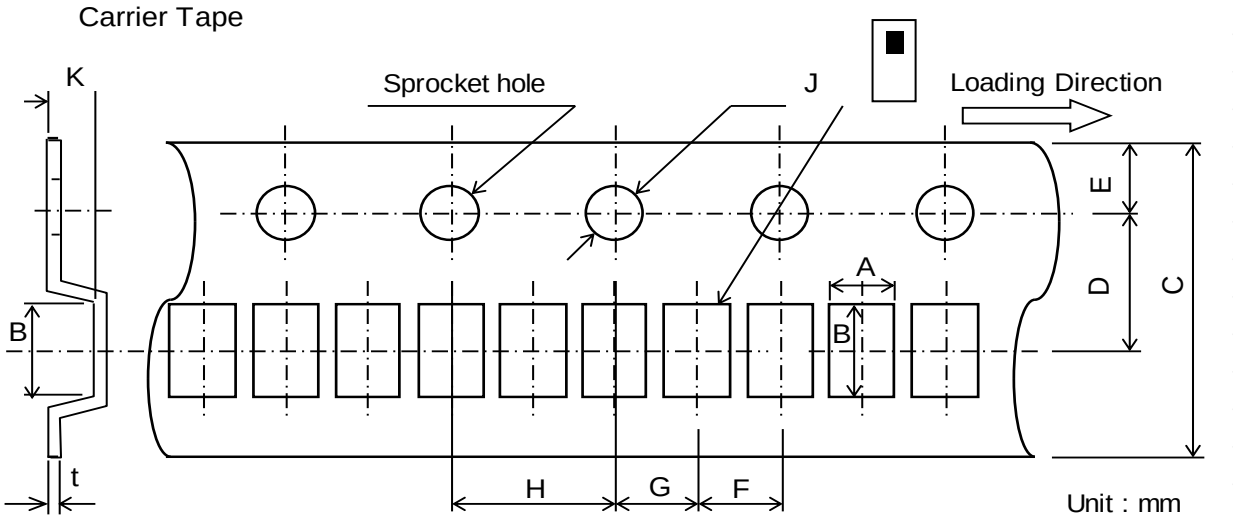

Dimensions (mm)

A	B	C	D	E	F	G	H	J	K	t
0.62	1.12	8.0	3.5	1.75	2.0	2.0	4.0	1.5	0.48	0.25
+/-0.05	+/-0.05	+/-0.2	+/-0.05	+/-0.1	+/-0.05	+/-0.05	+/-0.05	+0.1/-0	MAX	+/-0.05

STANDARD PACKAGE QUANTITY (pieces/reel)
10,000

REMINDERS FOR USING THESE PRODUCTS

Before using these products, be sure to request the delivery specifications.

SAFETY REMINDERS

Please pay sufficient attention to the warnings for safe designing when using these products.

⚠ REMINDERS

The products listed on this catalog are intended for use in general electronic equipment (AV equipment, telecommunications equipment, home appliances, amusement equipment, computer equipment, personal equipment, office equipment, measurement equipment, industrial robots) under a normal operation and use condition.
The products are not designed or warranted to meet the requirements of the applications listed below, whose performance and/or quality require a more stringent level of safety or reliability, or whose failure, malfunction or trouble could cause serious damage to society, person or property.
Please understand that we are not responsible for any damage or liability caused by use of the products in any of the applications below or for any other use exceeding the range or conditions set forth in this catalog.

(1) Aerospace/Aviation equipment
(2) Transportation equipment (cars, electric trains, ships, etc.)
(3) Medical equipment
(4) Power-generation control equipment
(5) Atomic energy-related equipment
(6) Seabed equipment
(7) Transportation control equipment
(8) Public information-processing equipment
(9) Military equipment
(10) Electric heating apparatus, burning equipment
(11) Disaster prevention/crime prevention equipment
(12) Safety equipment
(13) Other applications that are not considered general-purpose applications

When using this product in general-purpose applications, you are kindly requested to take into consideration securing protection circuit/equipment or providing backup circuits, etc., to ensure higher safety.