REVISION HISTORY				
ECO	REV	DESCRIPTION	APPROVED	DATE
	2	PRODUCTION	JESUS R.	01-21-10

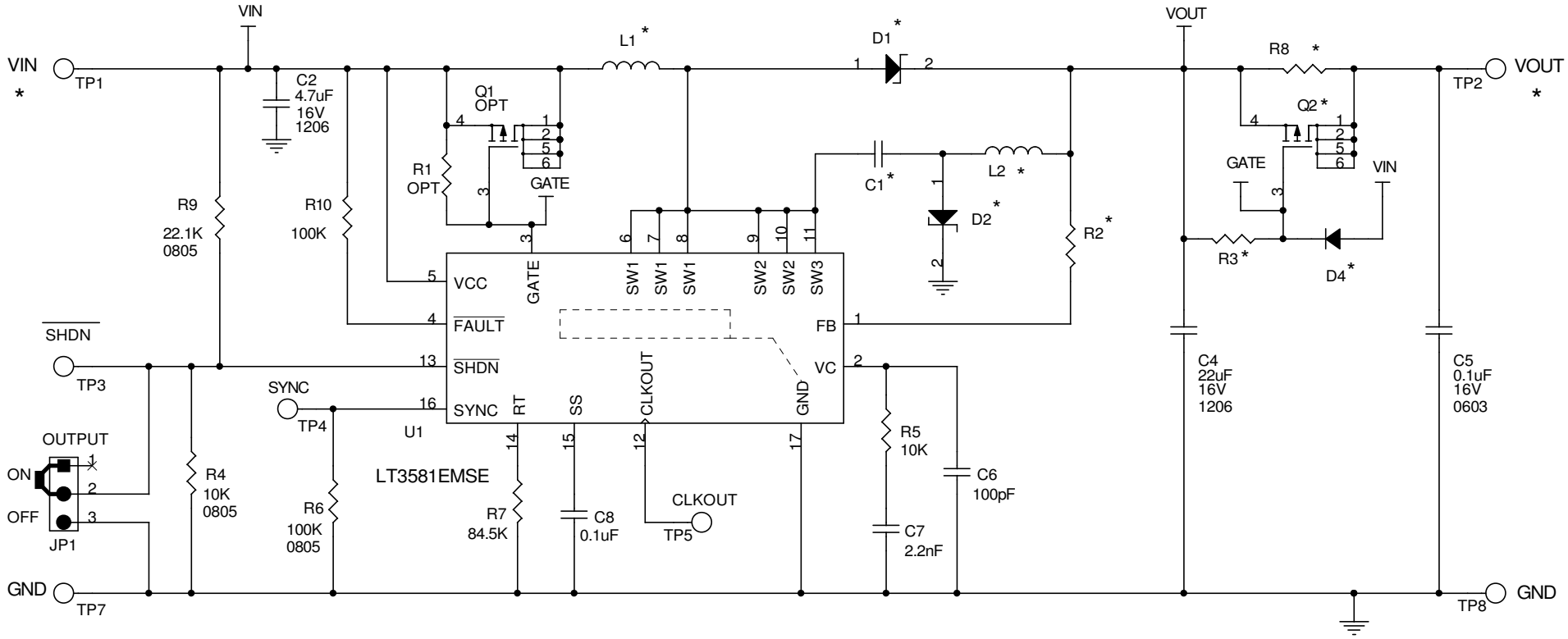

*

ASSEMBLY TYPE	VIN	VOUT	C1	D1	D2	D4	L1	L2	Q2	R2	R3	R8
DC1424A-A	5V TO 10V	+12V@0.9A	NOT USED	DFLS220L	NOT USED	CMDSH-3TR	IHLP2525CZER-4R7	NOT USED	Si3433DV	130K	6.8K	NOT USED
DC1424A-B	5V TO 12V	-12V@0.75A	2.2uF,25V	NOT USED	DFLS130L	NOT USED	IHLP2525CZER8R2	IHPL2020CZE-1110uH	NOT USED	143K	NOT USED	0

NOTE: UNLESS OTHERWISE SPECIFIED

1. ALL RESISTORS ARE IN OHMS, 0402.
   ALL CAPACITORS ARE IN MICROFARADS, 0402.

CUSTOMER NOTICE

LINEAR TECHNOLOGY HAS MADE A BEST EFFORT TO DESIGN A CIRCUIT THAT MEETS CUSTOMER-SUPPLIED SPECIFICATIONS; HOWEVER, IT REMAINS THE CUSTOMER'S RESPONSIBILITY TO VERIFY PROPER AND RELIABLE OPERATION IN THE ACTUAL APPLICATION. COMPONENT SUBSTITUTION AND PRINTED CIRCUIT BOARD LAYOUT MAY SIGNIFICANTLY AFFECT CIRCUIT PERFORMANCE OR RELIABILITY. CONTACT LINEAR TECHNOLOGY APPLICATIONS ENGINEERING FOR ASSISTANCE.

THIS CIRCUIT IS PROPRIETARY TO LINEAR TECHNOLOGY AND SUPPLIED FOR USE WITH LINEAR TECHNOLOGY PARTS.

CONTRACT NO.

APPROVALS

PCB DES. A. K.

ENG. JESUS R.

LINEAR TECHNOLOGY
1630 McCarthy Blvd.
Milpitas, CA 95035
Phone: (408)432-1900
Fax: (408)434-0507
LTC Confidential-For Customer Use Only

TITLE: SCHEMATIC

BOOST/INVERTING REGULATOR

SIZE N/A | IC NO. LT3581EMSE DEMO CIRCUIT 1424A | REV 2

DATE: Monday, April 12, 2010 | SHEET 1 OF 1